FIXED LADDER w/CAGE & OVERSHOOT

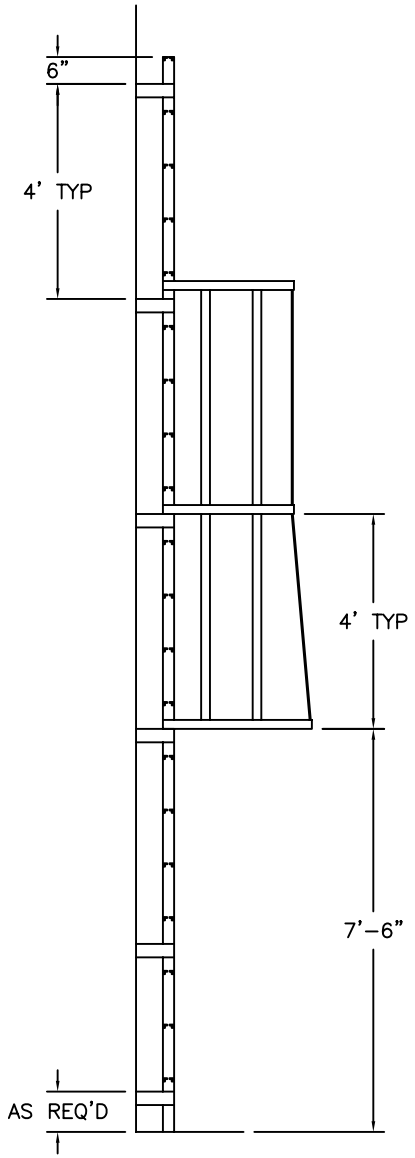

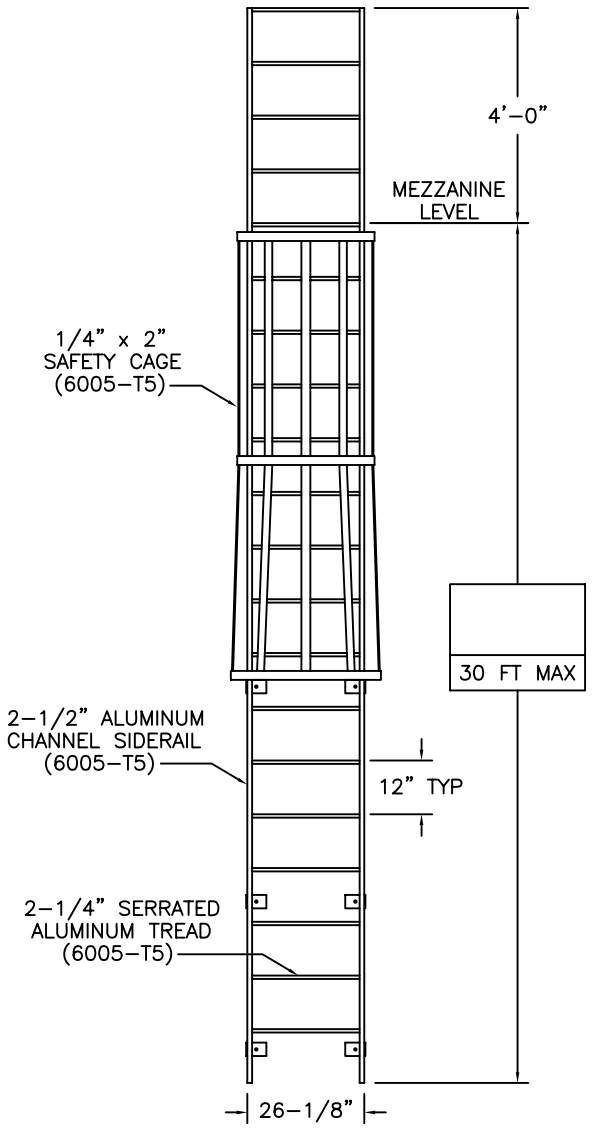

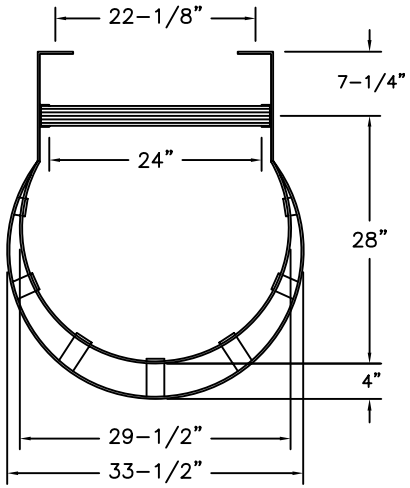

PLAN

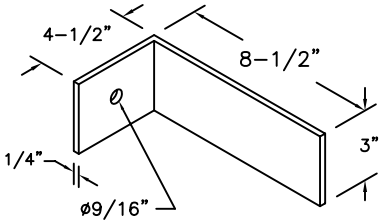

BRACKET DETAIL

NOTE:
ALL BOLTS/FASTENERS NECESSARY TO ANCHOR LADDER ARE BY OTHERS.

FACTORY FINISH
ALUMINUM-MILL FINISH

FL-13

Precision Ladders, LLC
P.O. Box 2279 Morristown, TN 37816-2279
Ph: (423) 586-2265 Fax: (423) 586-2091
www.PrecisionLadders.com

DWG. CHECK	ARCH'T OR ENG'R.	PROJECT			PRECISION REP
BUILT BY:	PURCHASE ORDER	DATE	PURCHASER		SERIAL#
CHECKED BY:	DRAWN BY: JEB	DATE 5/3/06	MODEL# FL-	QTY.	